MAGNETIC TOUCH LATCH

3.1×13 2.7×13 STEEL

ML-80

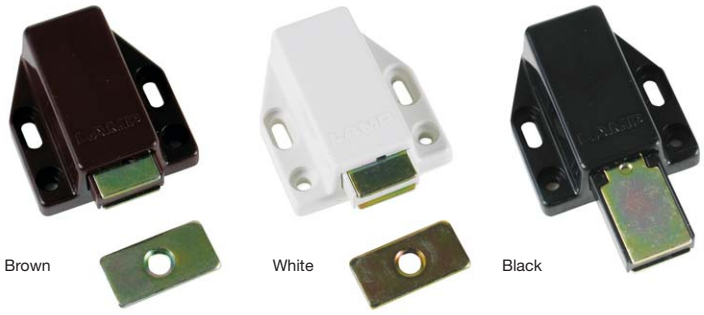

- The rotary cam mechanism offers a longer life than the usual spring mechanism
- Push to open/close
- Note: For overlay doors, allow a 3.5mm (9/64") gap between door and cabinet frame for push motion

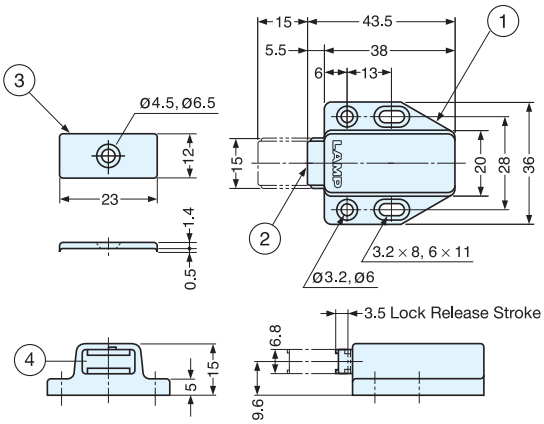

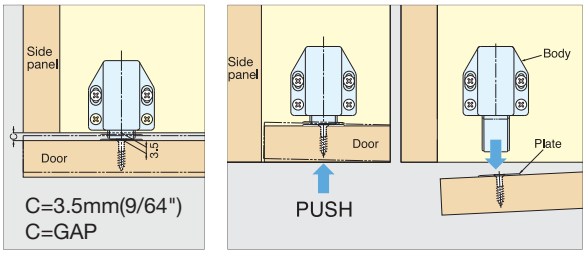

Installation

Item No.	Magnetic Force (kg)	Weight (g)	Box (pcs)	Carton (pcs)
ML-80/WHT	1.6 (3.5 lbs)	22	20	400
ML-80/BRN				
ML-80/BLK				

No.	Part Name	Material	Finish/Color
①	Body	ABS	White, Brown, Black
②	Yoke	Steel	Yellow Zinc Chromate
③	Counterplate		
④	Magnet	Ferrite	-

MAGNETIC TOUCH LATCH (LONG STROKE)

4×16 STEEL

ML-120

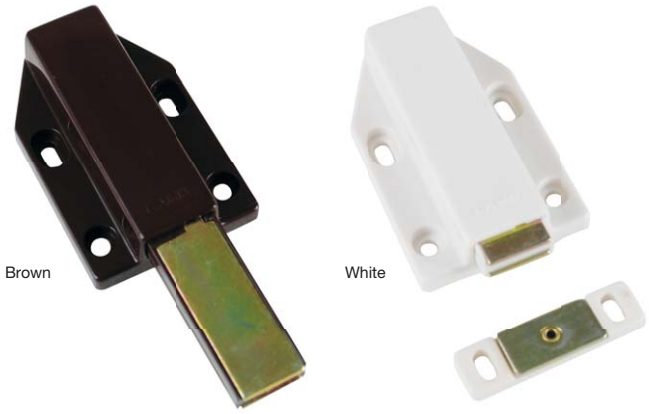

- The rotary cam mechanism offers a longer life than the usual spring mechanism
- Push to open/close
- Note: For overlay doors, allow a 3.5mm (9/64") gap between door and cabinet frame for push motion

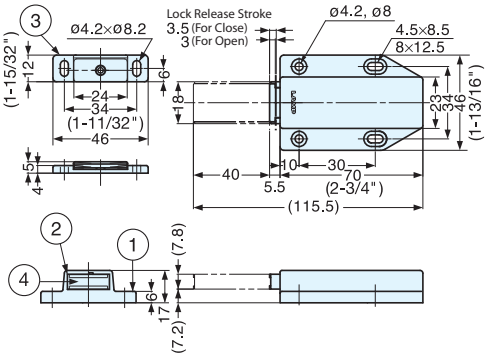

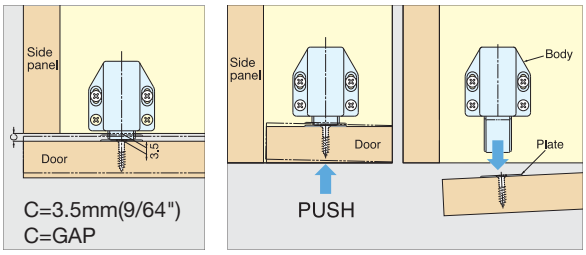

Installation

Item No.	Magnetic Force (kg)	Weight (g)	Box (pcs)	Carton (pcs)
ML-120/WHT	2.4 (5.2 lbs)	53	20	200
ML-120/BRN				

No.	Part Name	Material	Finish/Color
①	Body	ABS	White, Brown
②	Yoke	Steel	Yellow Zinc Chromate
③	Counterplate		
④	Magnet	Ferrite	-